Revision: Thicker brake pads added.
For model 107 and 116 wear limit of brake discs changed.
Long-term lubricant only Plastilube.

All models

Test data for brake pad blocks

Model			107, 108, 109, 111, 113, 114, 115, 116, 123	100
Thickness of brake pad block (lining backing plate and lining)		front	**15**[2])	20
		rear		18,5
Thickness of lining backing plate	front	caliper with 57 mm piston dia.	5	–
		caliper with 60 mm piston dia.	4,5	
	rear		5	5
Permissible wear[1]) of brake lining up to a **lining thickness** of		front	**2**	**9**
		rear		**2**

[1]) Renew brake linings within scope of maintenance jobs when the distance between the eye of the lining backing plate and the cross spring or lining holding spring amounts to approx. 3 mm.

In the event of aggravated operating conditions or increased wear caused e.g. by sharp, sports style driving, trailer operation etc. there may by a need for checking the thickness of the brake block lining on front axle at shorter intervals.

[2]) On model 107 starting March 1980 and on models 116 and 123 starting model year 1980 front 17.5.

Test data for brake discs

Model		107[1])	107[2]) 116	113 114[1]) 115 and 108 109 1st version	108 109 2nd version	115.114 114[2]) 123	100
Thickness of brake disc	front	22		12,6	19	12,6	22
	rear	10					16
Wear limit	front	20.6	20.0[3])	11.05	17.80	10.6	18.41
	rear	8.3					14.48

[1]) Caliper with 57 mm piston dia.
[2]) Caliper with 60 mm piston dia.
[3]) Model 107 starting March 1980, model 116 model year 1980 19.4.

Lubricant

Heat-resistant longterm lubricant (Plastilube)

Check and clean disc brakes, remove brake pads for this purpose

Special tools

Impact puller	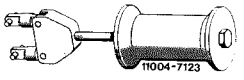	123 589 06 33 00
Puller for tightly seated brake blocks	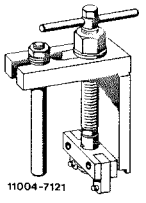	123 589 07 33 00
Piston turning pliers	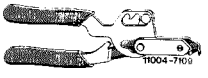	000 589 50 37 00
Piston resetting pliers	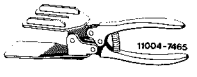	123 589 00 37 00
Slide gage for measuring thickness of brake disk	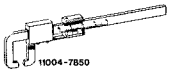	000 589 37 19 00

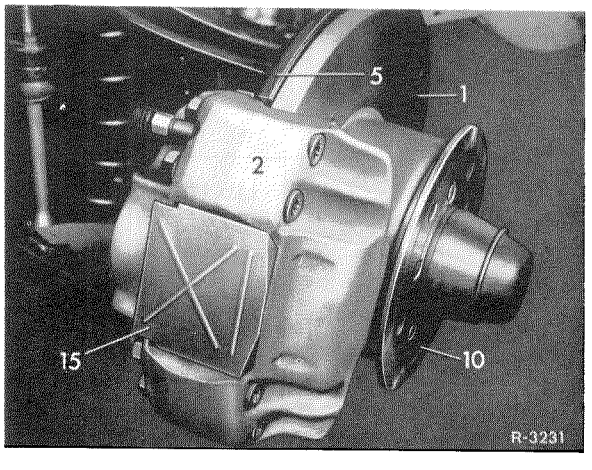

- Remove shaft cover plate (15) **(only at front axle)** of vehicles with solid brake discs and calipers with 57 mm piston dia.

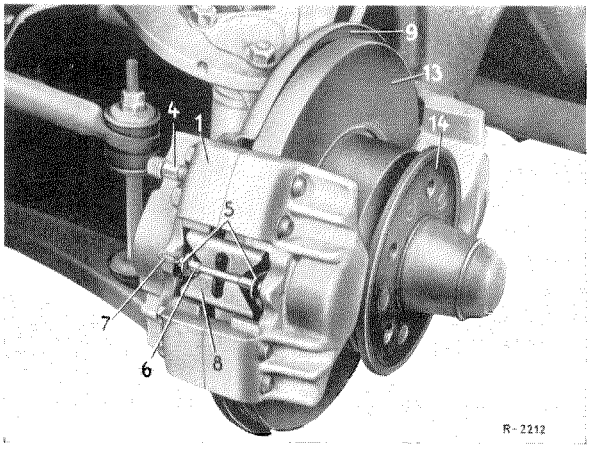

- On model 100, remove locking eyes (7), holding pins (6) and spring plate (8) on front axle.

- On model 100, remove locking eyes (9), holding pins (10) and cross spring on rear axle.

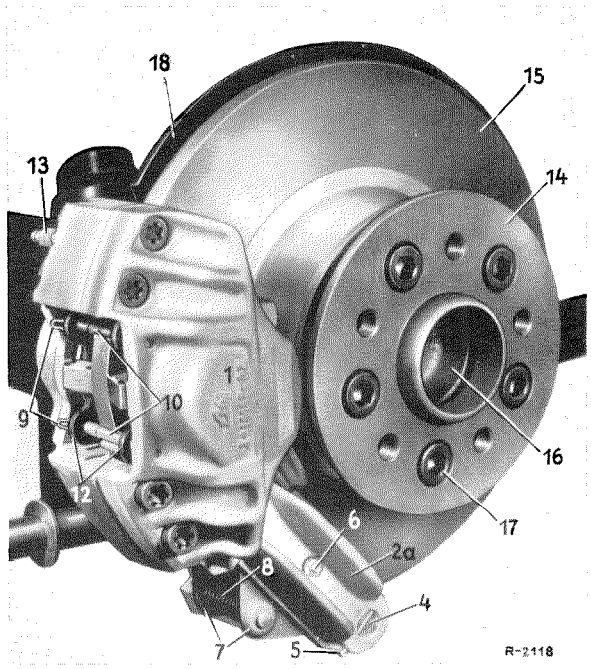

- On vehicles with brake lining wear indicator, pull cables of sensors (25) out of plug connection (26) on caliper.

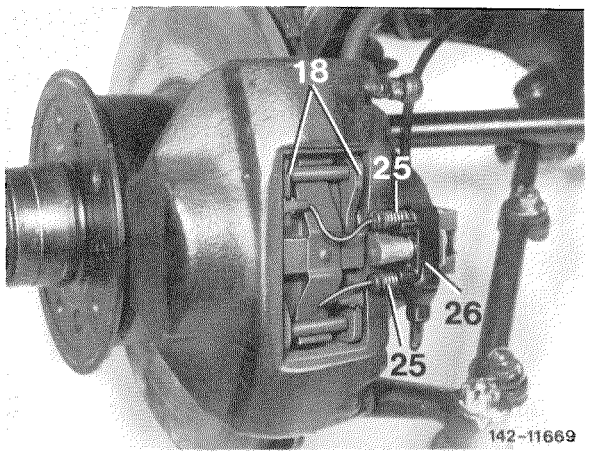

- Pull sensors (25) out of lining backing plate or out of brake lining.

Note: Renew clip sensor on which insulation layer of contact pin is worn out or in the event of damages on a part of the sensor including line insulation.

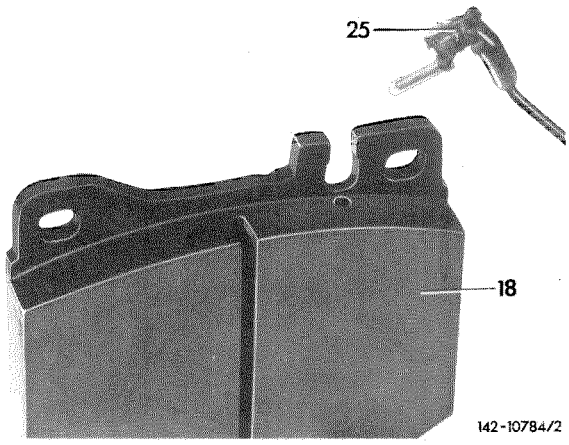

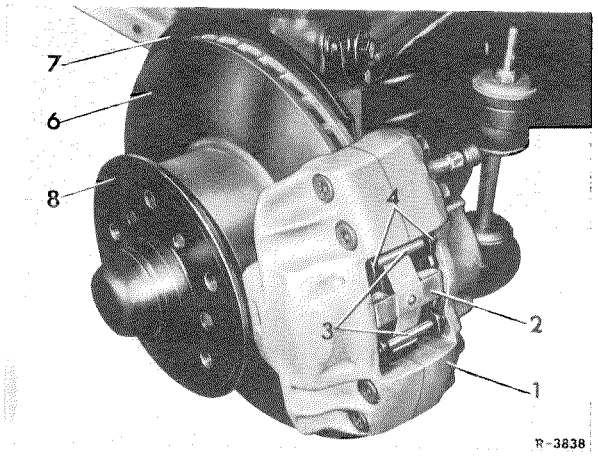

- On all other brakes with Teves (ATE) caliper, knock holding pins (3) out of caliper by means of a punch and remove cross spring (2).

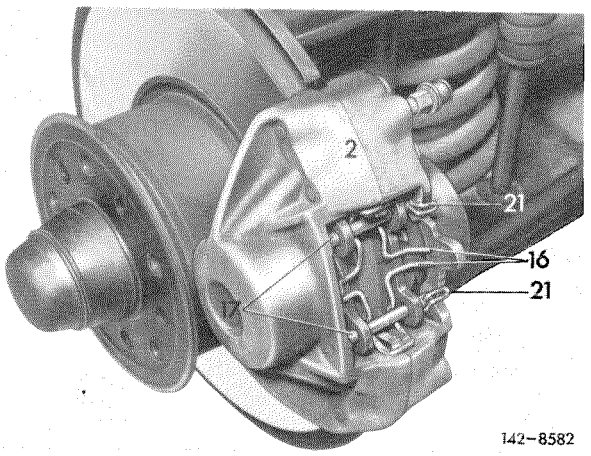

- On all other brakes with Bendix (BX) caliper, remove locking eyes (21), holding pins (17) and lining-holding springs (16).

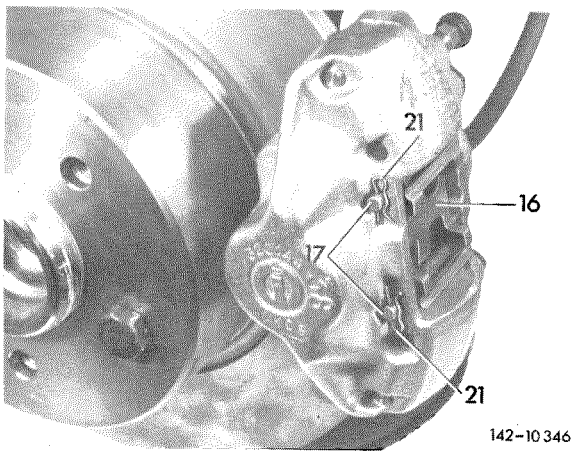

- On all other brakes with Girling caliper at rear axle, remove locking eyes (21), holding pins (17) and lining holding plates (16).

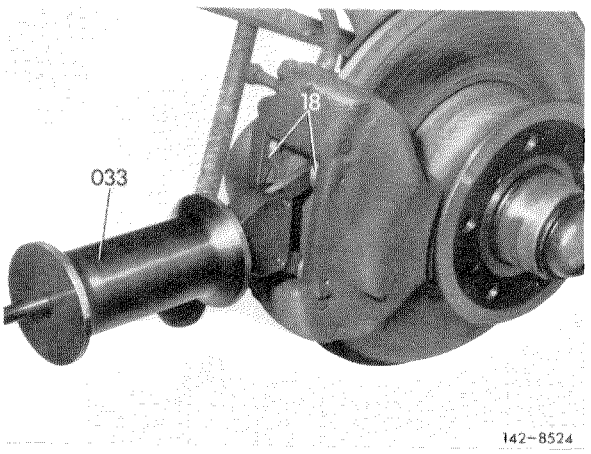

- Knock brake pad blocks out of caliper by means of an impact puller (033).

- Use puller (32) for stuck brake pad blocks.

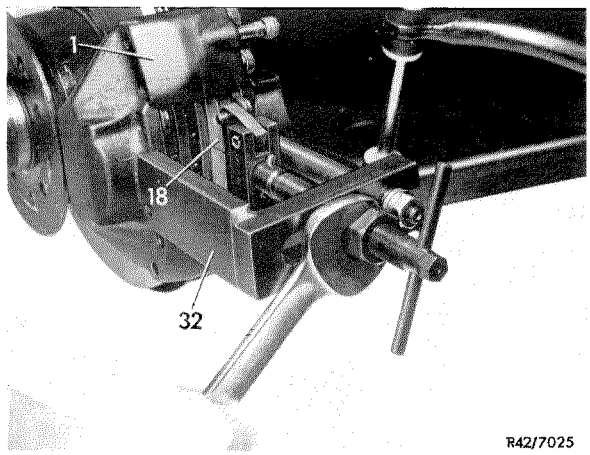

- Clean guide for brake pad block in caliper by means of a cylindrical brush.

- Check dust caps visually for cracks and pistons for leaks. If a dust cap is damaged, remove caliper and recondition.

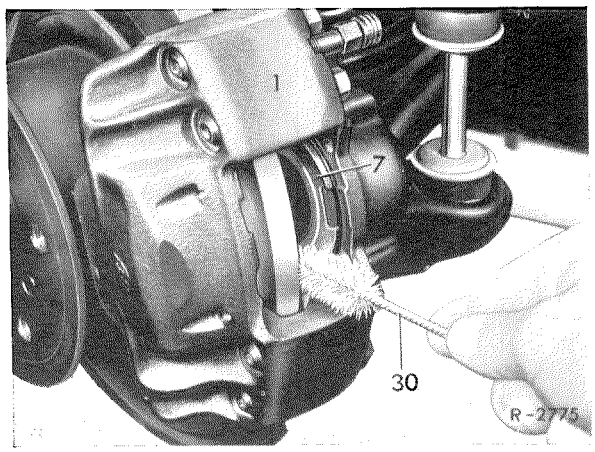

- Push back piston with resetting pliers (31), while checking piston for easy operation.

Note

Set back pistons of caliper **only** with piston resetting pliers 123 589 00 37 00. Using other tools increases the risk of damaging the piston or the dust cap.

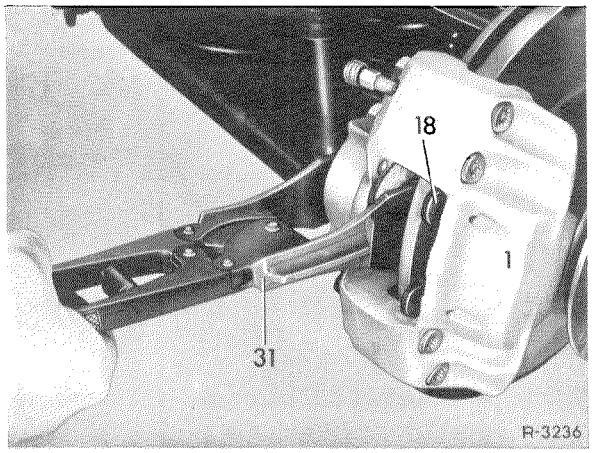

Note

Pushing back pistons of caliper **without disc runot compensating device** should be easy, while the pistons of a caliper with disc runout compensating device will move back to their end position slightly restrained, since the friction torque of the guide pin must be overcome.

	Front axle	Rear axle
with disc runout compensating device	100	100, 108, 109, 111, 113
without disc runout compensating device	107, 108, 109, 111, 113, 114, 115, 116, 123	107, 114, 115, 116, 123

Check and clean disc brakes, remove brake pads for this purpose

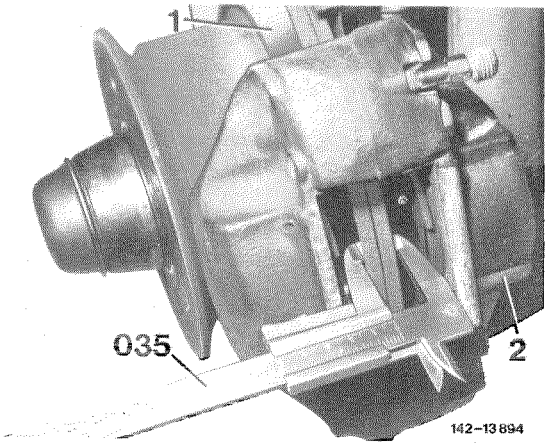

- Measure thickness of brake disc (for test values refer to pertinent data).

Note

Make sure that the wear limits of brake discs are observed.

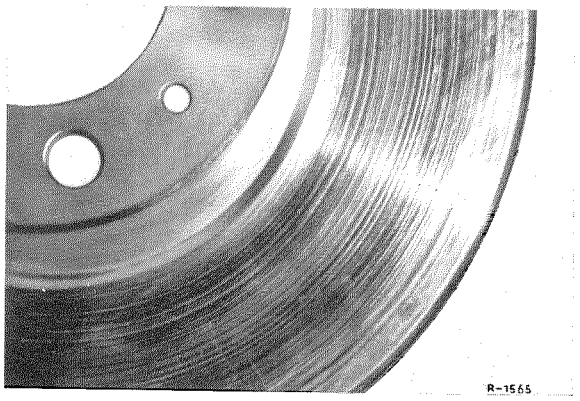

- Check brake discs for score marks and cracks. Circumferential score marks up to 0.5 mm in depth are permitted.

Note

Clean badly contaminated brake discs – recognized by gray or blue discoloration of brake surfaces – with cleaning pads.

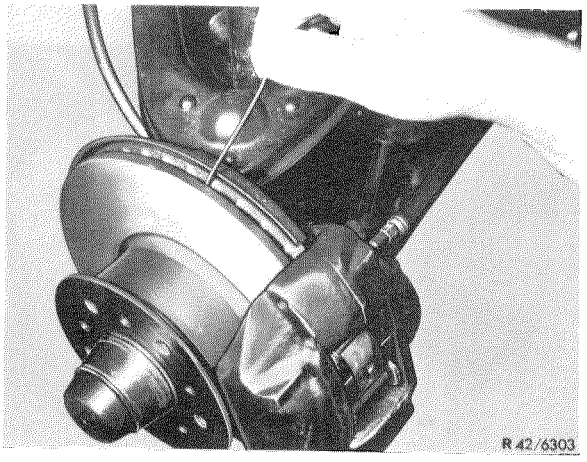

- Clean air shafts of ventilated brake discs with a thin wire, making sure that the balancing clips are not knocked out of air shaft. Blow loose dirt out of shafts by means of compressed air.

Note

Badly clogged air shafts can be cleaned in a washing unit only upon removal of brake discs.

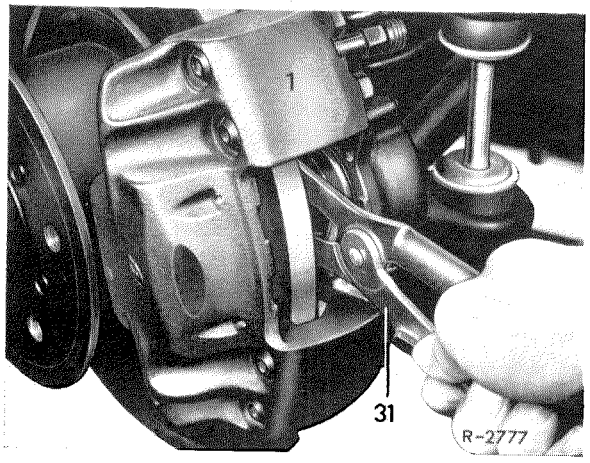

- On all models (except model 100) check position of piston in caliper. If required, correct with piston turning pliers (31).

- Clean rain groove in brake pad block, measure thickness of lining. If required, transpose brake pad blocks of each caliper.

- Rub brake pad blocks at points identified by an arrow with a heat-resistant longterm lubricant. Then install brake pad blocks into caliper.

- Install cross spring, lining holding springs, lining holding plate, holding pins and, if applicable, shaft cover plate and locking eyes.

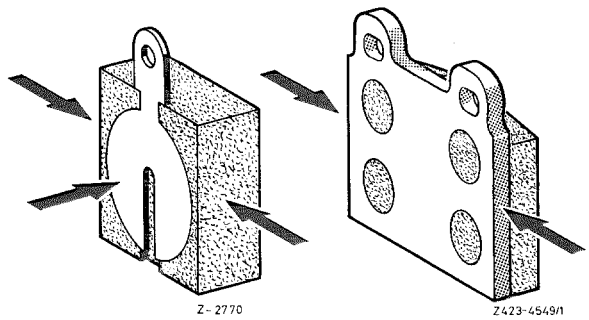

- On vehicles with brake lining wear indicator, insert sensors into brake lining, as well as cable into plug connection.

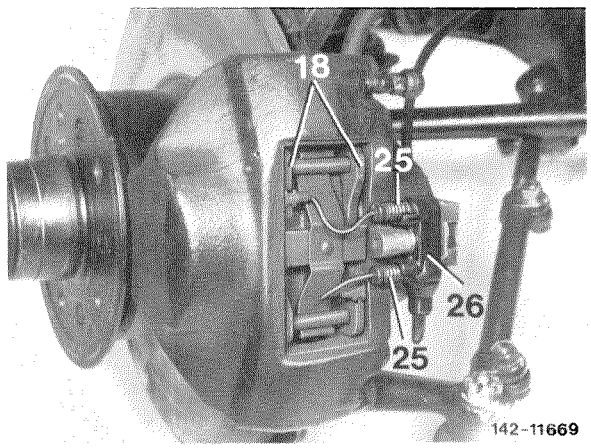

- Energetically actuate brake pedal several times until firm resistance is felt. Then check level of brake fluid in expansion tank and top up, if required.

Note: On vehicles with pressure difference warning indicator (DDW), the warning lamp of the indicator may light up when the lining is changed. For this reason, make sure that the release pin (42) on switch (41) is pushed in after changing the lining.

The new brake pad blocks should be **broken-in with care,** that is, brake vehicle several times from 80 to 40 km/h at slight pedal pressure.

Prior to each braking operation, let brakes cool down somewhat. For braking to a stop at high deceleration, linings should be broken-in well.